© 2009 Brinkley Sargent Architects, Inc.

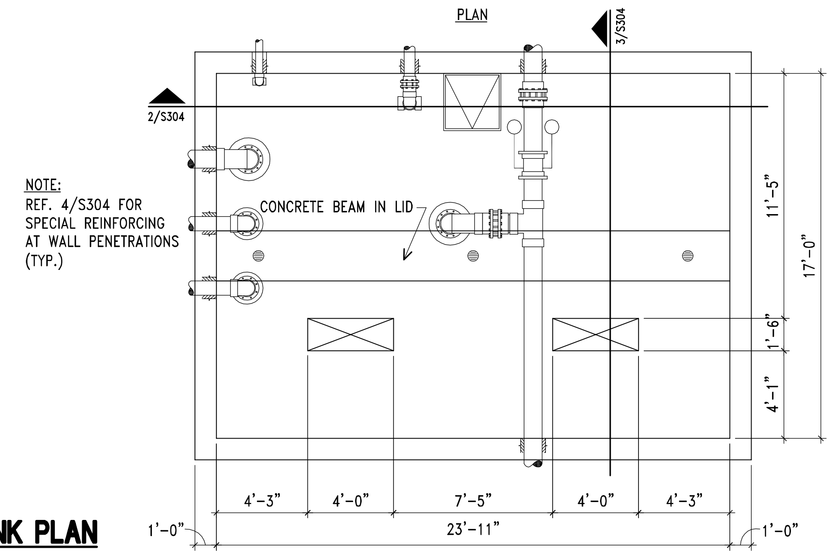

SURGE TANK PLAN
SCALE: 1/4"=1'-0"

1

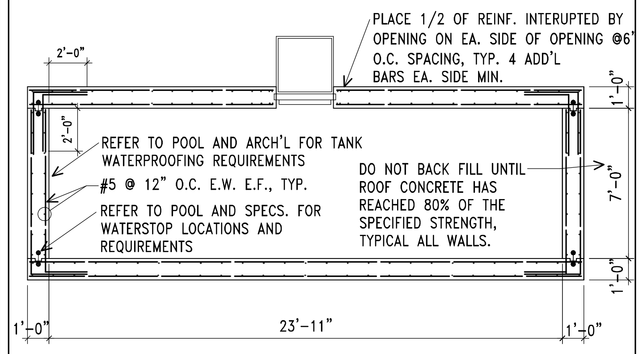

SECTION

TYPICAL DETAIL- SURGE TANK DETAIL
SCALE: 1/4"=1'-0"

2

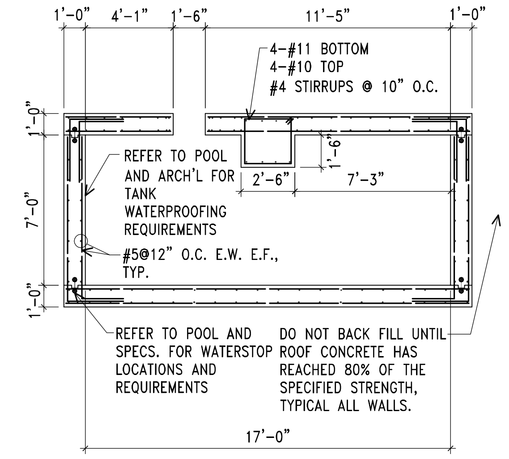

SECTION

TYPICAL DETAIL- SURGE TANK DETAIL
SCALE: 1/4"=1'-0"

3

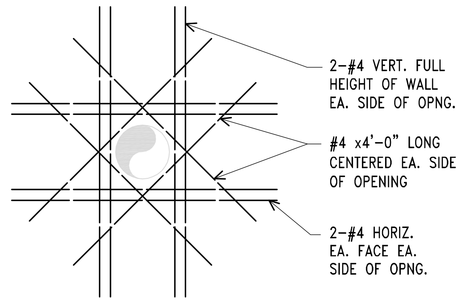

REINFORCE SLAB AND WALLS PER PLAN AND SECTIONS. REINFORCING SHOWN IS ADDITIONAL REINFORCING (TYP.). REFER TO ARCHITECTURAL & POOL DRAWINGS FOR DIMENIONS & SHAPES

TYPICAL DETAIL
SCALE: NO SCALE

SPECIAL REINFORCING FOR WALL PENETRATIONS IN SURGE TANK

4

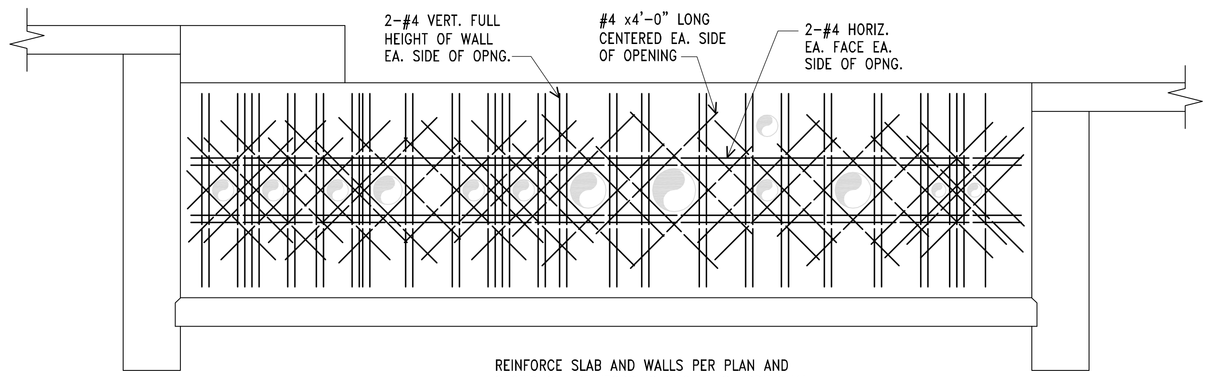

REINFORCE SLAB AND WALLS PER PLAN AND SECTIONS. REINFORCING SHOWN IS ADDITIONAL REINFORCING (TYP.). REFER TO ARCHITECTURAL & POOL DRAWINGS FOR DIMENIONS & SHAPES

WALL ELEVATION-
SCALE: 1/2"=1'-0"

SPECIAL REINFORCING FOR WALL PENETRATIONS

5

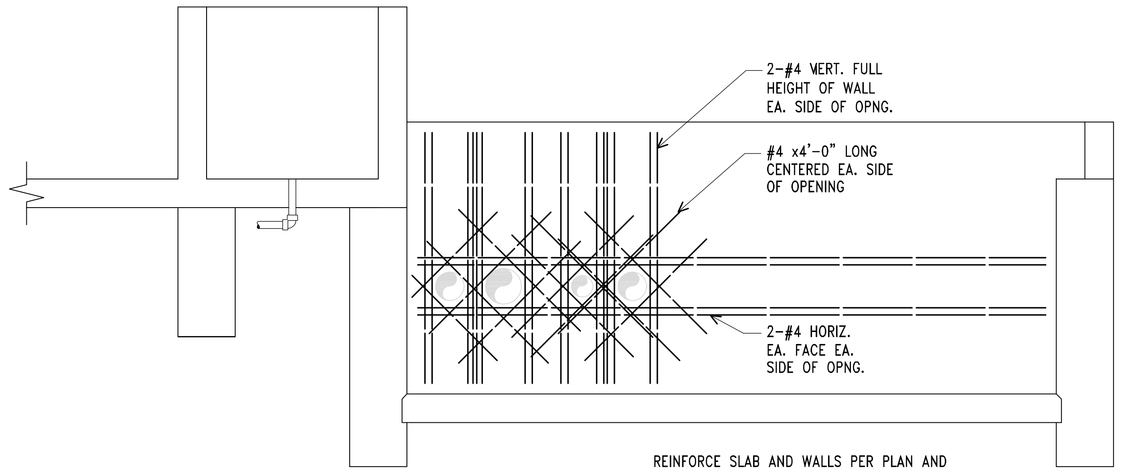

REINFORCE SLAB AND WALLS PER PLAN AND SECTIONS. REINFORCING SHOWN IS ADDITIONAL REINFORCING (TYP.). REFER TO ARCHITECTURAL

WALL ELEVATION-
SCALE: 1/2"=1'-0"

SPECIAL REINFORCING FOR WALL PENETRATIONS

6

NO.	DATE	DESCRIPTION
1	6/19/09	Addendum #3

REVISIONS

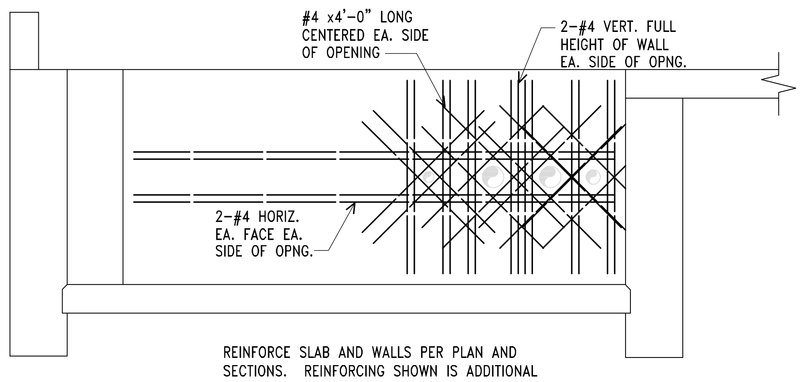

REINFORCE SLAB AND WALLS PER PLAN AND SECTIONS. REINFORCING SHOWN IS ADDITIONAL REINFORCING (TYP.). REFER TO ARCHITECTURAL & POOL DRAWINGS FOR DIMENIONS & SHAPES

WALL ELEVATION-
SCALE: 1/2"=1'-0"

SPECIAL REINFORCING FOR WALL PENETRATIONS

7

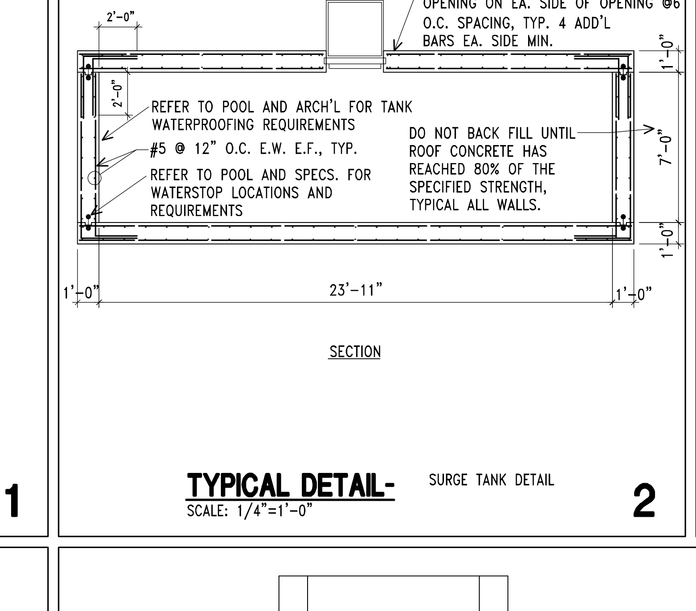

TYPICAL DETAIL-
SCALE: 3/4"=1'-0"

CANTILEVER RETAINING WALL > 6'-0" AND 10'-0" MAX.

1

8

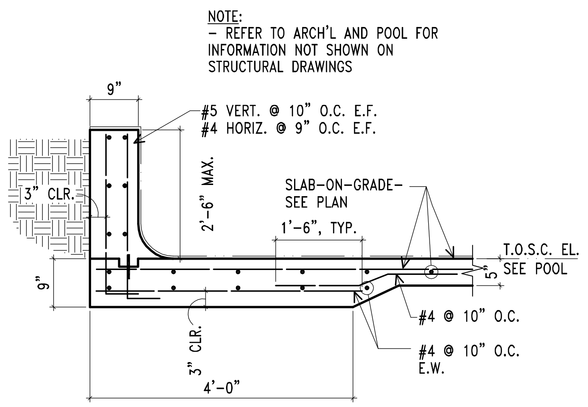

TYPICAL DETAIL-
SCALE: 3/4"=1'-0"

WET DECK RETAINING WALL

1

9

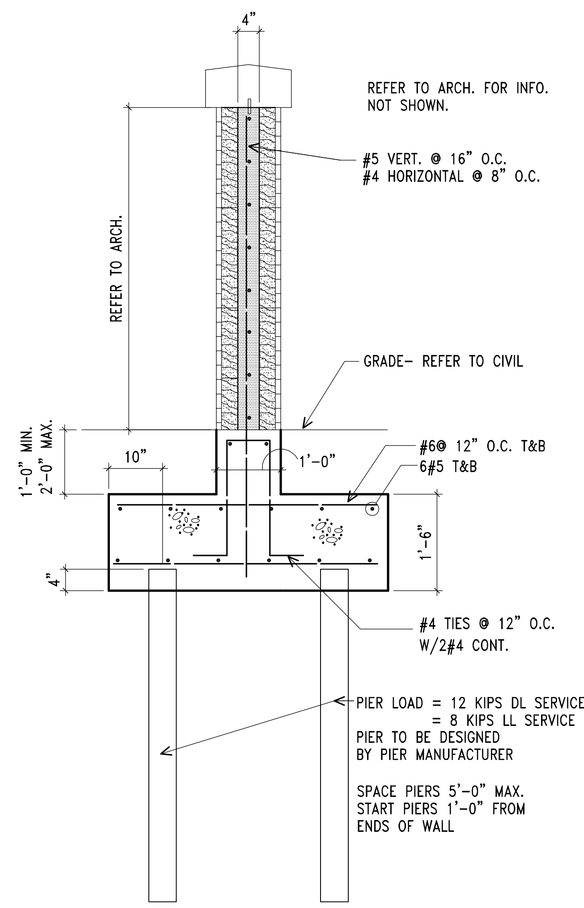

TYPICAL DETAIL- SITE SIGN
SCALE: 3/4"=1'-0"

1

10

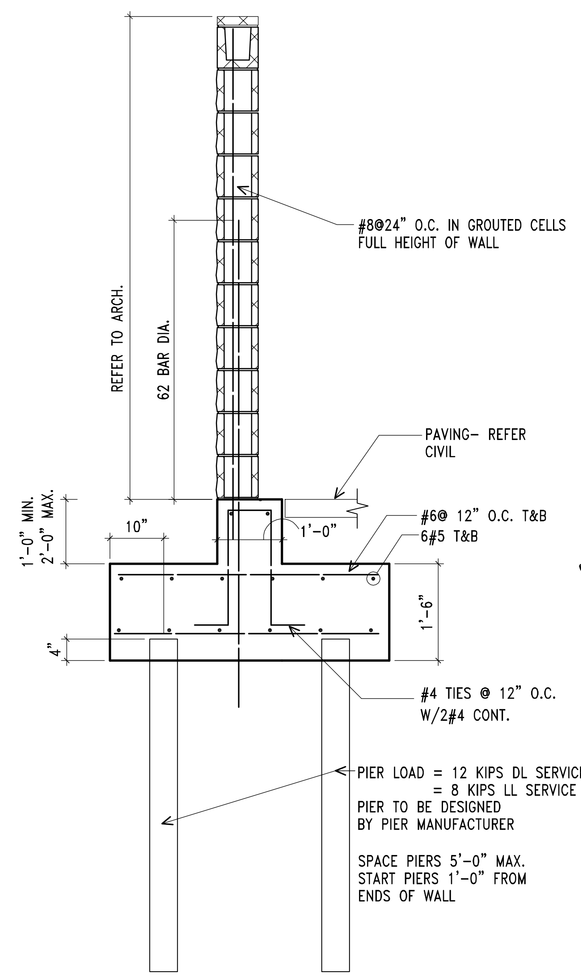

TYPICAL DETAIL- DUMPSTER ENCLOSURE
SCALE: 3/4"=1'-0"

1

11

BRINKLEY SARGENT ARCHITECTS
A Texas Corporation

Architect: Brinkley Sargent Architects (972) 960-9970
Aquatics: Counsilman-Hunsaker Assoc. (314) 894-1245
MEP: Talios (214) 744-6199
Civil: LJA Engineering (214) 347-7272
Landscape: Clark Condon Assoc. (713) 871-1414
Structural: Structural Engenuity (972) 247-9250

WEST IRVING AQUATIC CENTER

TITLE

STATE OF TEXAS
MICHAEL W. WHITNEY
88915
LICENSED
PROFESSIONAL ENGINEER

IN THE SEALING OF DRAWINGS AND SPECIFICATIONS, THE ARCHITECT ASSUMES NO RESPONSIBILITY FOR ELECTRICAL, MECHANICAL, STRUCTURAL, CIVIL, OR PLUMBING DESIGN WHICH IS THE SOLE RESPONSIBILITY OF THE ENGINEER OF RECORD, PRACTICING IN THE TEXAS CHARTERING PRACTICE ACT

STAMP

TYPICAL FRAMING DETAILS

SHEET DESC.

20804
5/20/2009

S304

Drawing: J:\09010- Irving Pool\Struct\09010-S304.dwg at Jun 19, 2009-1:41pm by strc055-2
Layout: S304 Xrefs: 09010-Stlt.dwg